(No Model.) 3 Sheets—Sheet 3.

R. S. BATTLES.

LOCOMOTIVE.

No. 455,154. Patented June 30, 1891.

FIG. 4

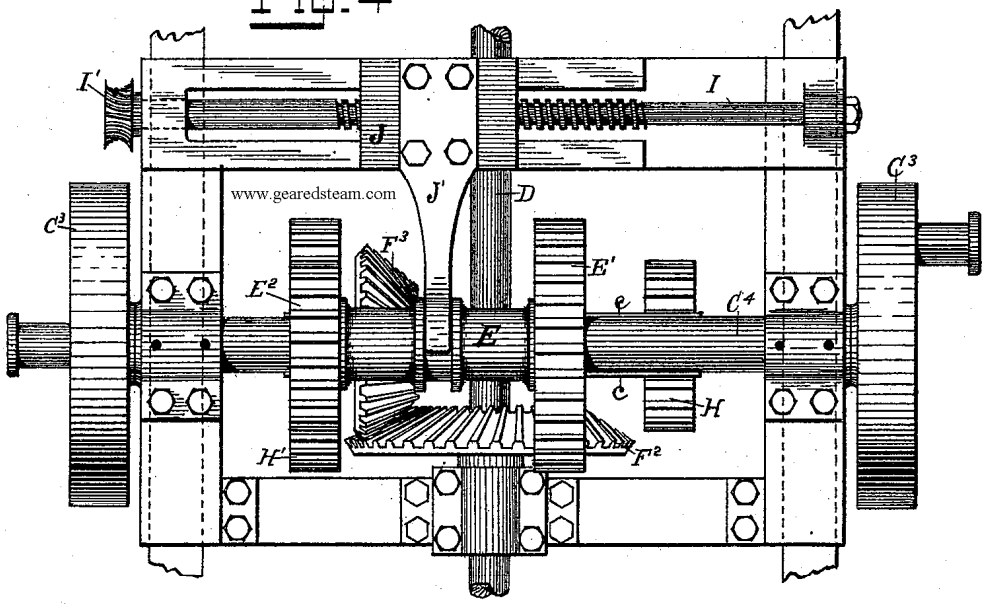

www.gearedsteam.com

FIG. 5

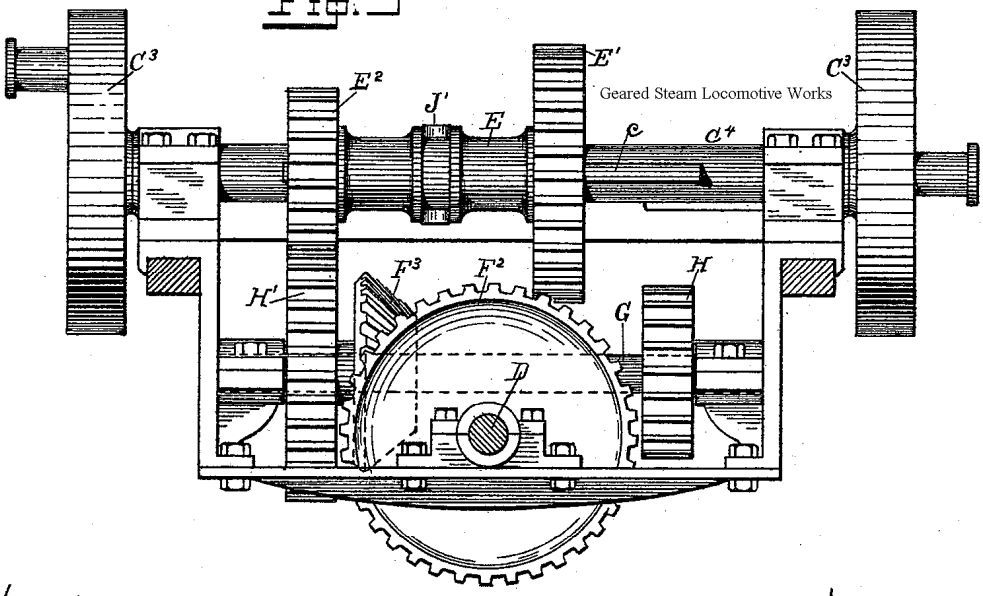

Geared Steam Locomotive Works

WITNESSES

S. D. Dobbins.

Chas. G. Brouillet.

INVENTOR

R. S. Battles

By his Att'ys. Hallock & Hallock

THE NORRIS PETERS CO., PHOTO-LITHO., WASHINGTON, D. C.